Postal Regulatory Commission
Submitted 5/11/2007 2:55:31 pm
Filing ID: 56578
Accepted 5/11/2007

BEFORE THE
POSTAL RATE COMMISSION
WASHINGTON, DC 20268-0001

POSTAL RATE AND FEE CHANGES, 2006	))	Docket No. R2006-1

REPLY COMMENTS OF
FINANCIAL SERVICES ROUNDTABLE,
MAJOR MAILERS ASSOCIATION,
NATIONAL ASSOCIATION OF PRESORT MAILERS
AND NATIONAL POSTAL POLICY COUNCIL
(May 11, 2007)

The Financial Service Roundtable ("Roundtable"), Major Mailers Association ("MMA"), National Association of Presort Mailers ("NAPM") and National Postal Policy Council ("NPPC") (collectively "Letter Mailers Group") respectfully submit these reply comments pursuant to Order No. 13.

INTRODUCTION AND SUMMARY

Now we know the price tag for the "rebalancing" proposed by the Postal Service between Standard letters and flats: 0.7 cents per piece for each of the 51 billion or so automation and non-automation letters entered as regular Standard Mail each year, or about $350 million per year. Extending the rate "rebalancing" to nonprofit regular Standard Mail would increase the total by another $100 million or so. These are the surcharges that the Postal Service proposes to extract each year from users of letter-shaped Standard Mail so that users of flat-shaped Standard Mail may continue enjoying, for the 18th consecutive year since the Postal Service and the Commission

found in 1990 that rates should reflect shape-related cost differences, the benefits of rates that fail to do so.

The parties' initial comments confirm that the Commission should uphold its February 26 decision recommending rates that finally eliminate most—but not all—of this rate preference. Redistribution schemes like those now proposed on behalf of the flats mailers are justified on grounds of "rate shock" only in narrow circumstances. First, the financial injury to be avoided must be significant, unavoidable absent regulatory relief, and "transitional" (*i.e*., short-run or temporary). Second, the benefits of this scheme must appear likely to outweigh the additional financial harm imposed on the mailers that must pay the $350 million annual assessment. Third, the record must establish that the resulting rate structure is fair and efficient.

Analyses offered in satisfaction of these proof requirements must be supported by the record. As the Commission held in Order No. 8 (at 6), proponents of changes to the Commission's recommended rates "need to rely on record evidence," not "anecdotal comments unconnected to the record." Comments by nonparties do not constitute evidence unless offered into evidence or found to qualify for official notice. Rule 20b(c), 39 C.F.R. § 3001.20b(c). And basic notions of administrative due process forbid the Commission from giving weight to data or analyses not subject to the full gamut of adversarial testing. *Mail Order Ass'n of America v. USPS*, 2 F.3d 408, 428-30 (D.C. Cir. 1993); PRC Op. R76-1 (June 30, 1976) at 25 n. 2; Docket No. MC78-1, Order No. 280 (issued May 18, 1979) at 27; PRC Op. R76-1 (June 30, 1976) at 25 n. 2; Docket No. R2006-1, Order No. 1482 (issued Nov. 8, 2006) at 4.

For the reasons explained here, the initial comments demonstrate that the flats mailers have not come close to satisfying these standards.

ARGUMENT

I. MAILERS HAD AMPLE NOTICE THAT FLAT-SHAPED STANDARD MAIL WAS OVERDUE FOR LARGE RATE INCREASES.

The initial comments confirm that mailers could not have reasonably relied on a continuation of the old rate design in making procurement and marketing decisions. First, mailers have been on notice since 1990 that postal rates needed realignment to reflect the cost differential between letters and flats. If the movement toward the recognition of shape-related costs had proceeded with reasonable speed, full cost recognition would have occurred years ago. FSR-MMA-NAPM-NPPC Comments at 7-9 (citing Commission precedent since Docket No. R90-1); *see also* Order No. 13 at 4 ("as Valpak points out, the Commission issued warnings over the course of several years in its decisions, orders and *Federal Register* notices to potential affected parties and their trade associations on the potential likelihood of rebalancing of rates in the R2006-1 rate case").

Second, the Commission put mailers squarely on notice 18 months ago, in Docket No. R2005-1, that the longstanding deviations from cost-based pricing in the existing rate structure were overdue for correction in the next omnibus rate case, and that above-average rate increases for the previously underpriced rate cells were likely—rate shock or no rate shock. R2005-1 PRC Op. & Rec. Decis. (Nov. 1, 2005) at ii and ¶¶ 5030, 5032; *accord*, Order No. 13 at 8.

Third, the Commission gave notice at the outset of the present case that (1) the Postal Service was proposing changes in Standard Mail rates generally and "shape-related changes" specifically, (2) in "the course of consideration, participants may propose alternatives to the Service's proposals," and (3) the "Commission's review of the Request . . . may result in recommendations that differ from proposed rates, fees and classification changes." Order No. 1464 (issued May 5, 2006), published at 71 Fed. Reg. at 27436, 27438, 27439 (May 11, 2006).[1] That notice appeared a full year ago.

The initial comments filed by the flats mailers and the Postal Service on May 4 do not even mention this 17-year history. It is fatal, however, to their case. "Exclamations of 'rate shock' are . . . undermined when the period since first notice has itself become a protracted delay." *National Association Of Regulatory Utility Commissioners v. FCC*, 737 F.2d 1095, 1146 (D.C. Cir. 1984) (no claim of rate shock for rate changes taking effect four years after FCC first stated that it intended to remedy the discrimination in the traditional rate structure); *see also Competitive Telecomms. Ass'n v. FCC*, 87 F.3d 522, 531-32 (D.C. Cir. 1996) ("the circumstances that may have justified the Commission's action [to mitigate rate shock] in 1992 do not justify its continued inaction in 1994, much less in 1996"); *City of Nephi, Utah v. FERC*, 147 F.3d 929, 932 (D.C. Cir. 1998) ("four-year mitigation requirement" after change of FERC ratemaking policy was sufficient to avoid claim of "rate shock"); *Washington Water Power Co. v. FERC*, 201 F.3d 497, 503 (D.C. Cir. 2000) (ratepayer that entered into a supply contract with a gas

[1] Publication of Order No. 1464 on the Commission's website and again in the Federal Register constituted legally sufficient notice of the contents of the Order to all the world, including CCM and its members. "Publication in the Federal Register is legally sufficient notice to all interested or affected persons regardless of actual knowledge or hardship resulting from ignorance." *Jones v. U.S.*, 121 F.3d 1327, 1329 (9th Cir. 1997) (quoting *Friends of Sierra R.R., Inc. v. ICC*, 881 F.2d 663, 667-68 (9th Cir. 1989)).

pipeline after the FERC had already announced that it would reconsider the ratemaking methodology for the pipeline in the next rate case "cannot show detrimental reliance" on the existing rate design). The repeated notices given to flats mailers over a 17-year span require denial of any relief on grounds of rate shock.

II. THE PROPONENTS OF RATE REBALANCING HAVE FAILED TO SHOW THAT THE MAY 14 RATE CHANGES WILL IMPOSE SIGNIFICANT "TRANSITIONAL" COSTS ON FLATS MAILERS.

Shifting flats-related costs to letter mailers is unwarranted for a second and independent reason: the record offers no evidence that flats mailers will suffer any significant "transitional" injury from the rates now scheduled to take effect on May 14. To make such a showing, the flats mailers would need to establish that (1) the forthcoming rate changes would result in large effective cost increases to a significant share of flats mailers; (2) the increases cannot be mitigated by changes in mailpiece design or mailing practices; and (3) the mailers' continued use of flats results from "transitional" or temporary rigidities in the mailers' supply arrangements, not from the inherent physical advantages of the larger mailpiece shape. The record fails to support any of these three elements. As the Coalition of Catalog Mailers ("CCM") acknowledged last month in belatedly seeking to reopen the record, the existing evidence on these points is "deficient." Motion of CCM to Reopen and Supplement the Record (Apr. 12, 2007) at 4; *id*. at 8-9 (asking for relief despite the "formal absence of evidence on the . . . costs that will be imposed on catalog mailers").

A. The Proponents Of Rate Rebalancing Have Exaggerated The Magnitude Of The Rate Increases For Most Flats Mailers.

The flats mailers suggest that the May 14 rate changes will produce rate increases exceeding 40 percent. CCM Comments at 3; Mail Order Association of America ("MOAA") Answer to CCM Motion to Reopen (April 19, 2007) at 3 (citing USPS witness Kiefer); Decision of Governors (March 19, 2007) at 9. This claim is overstated in several respects.

First, mailpieces weighing less than the piece/pound breakpoint of 3.3 ounces[2] can be entered as letter-shaped mail simply by folding the mailpieces and inserting them into a letter-size envelope. The Governors' decision of March 19 suggested that piece-rated (*i.e*., light-weight) flats, despite the 41.1 percent rate increase applicable to automation flats entered at destination SCFs, were unlikely to be able to avoid the rate increases through reformatting as letters. Decision of Governors (March 19, 2007) at 9. The Postal Service's recent public statements, however, are considerably more positive about the feasibility of this option. The following press release, issued by the Postal Service only four days ago, is illustrative:

> **Postal Service Says Shape Matters**
>
> **Money-saving approach takes effect May 14**
>
> WASHINGTON, D.C. – A new Postal Service approach to pricing will reshape the future of mail on May 14, enabling customers to save money by in some cases simply folding the contents of an envelope. The new pricing system is based on the shape of mail, not just the weight, reflecting the fact that the costs for handling letters, large envelopes, and packages differs. *Customers can reduce their mailing costs simply by choosing different packaging.*

[2] *See* DMM 201.1.1.2 and 201.3.4 (establishing maximum weights of 3.3 and 3.5 ounces for specified categories of Standard Mail letters).

> *For example, if the contents of a First Class Mail large envelope are folded and placed in a letter-sized envelope, customers can reduce postage by as much as 39 cents per piece.*

USPS News Release No. 07-41, "Postal Service Says Shape Matters" (May 7, 2007), available online at http://www.usps.com/communications/newsroom/welcome.htm (downloaded May 9, 2007) (emphasis added).

Another Postal Service news release, issued yesterday, reiterates this point:

> **Last Chance to Mail at the 39-Cent Price**
>
> **New Prices Take Effect May 14 — Tips Offered to Save Money**
>
> WASHINGTON, D.C. – New postage price and fees go into effect on Monday, May 14, including an increase in the price of a First-Class Mail stamp to 41 cents. But not all prices are going up.
>
> * * *
>
> Individual and business mailers can save money beginning May 14 by taking advantage of shape-based pricing; a new pricing system that recognizes the different costs for handling letters, large envelopes and packages. *Mailers will have the opportunity to obtain lower prices if they find ways to configure the mail into shapes that reduce handling costs for the Postal Service. For example, if the contents of a First-Class Mail large envelope are folded and placed in a letter-sized envelope, customers can reduce postage by as much as 39 cents per piece.*

USPS News Release No. 07-43, "Last Chance to Mail at the 39-Cent Price" (May 10, 2007), available at http://www.usps.com/communications/newsroom/welcome.htm (downloaded May 11, 2007) (emphasis added).

Equipment vendors have stepped up their marketing of folding and inserting equipment for this purpose. Attached as Appendix A, for example, is an advertisement from Pitney Bowes for such equipment. The advertisement states that the equipment is suitable for mailings up to 22 pages in thickness. *See* Pitney Bowes, *Flats to Folded*,

available at http://www.pb.com/bv70/en_us/extranet/contentfiles/editorials/downloads/ed__ECEd_Shape_Based_Price_Flat_To_Folded.pdf (downloaded May 10, 2007) (reproduced at Appendix A, *infra*).

The availability of this option for reformatting is significant because flats weighing less than the maximum letter weight represent about *half* of all commercial Standard Mail flats,[3] and about *70 percent* of nonprofit Standard Mail flats.[4] Moreover, these light-weight flats fall within the rate cells facing the highest percentage rate increases on May 14—including all of the cells with rate increases exceeding 47 percent.[5] Simply folding lightweight flats into letter-size envelopes thus eliminates half of the volume that supposedly faces rate shock—and the rate cells with the highest percentage rate increases in each presort and destination entry tier.[6]

Second, the flats mailers ignore the multiple causes of the highest percentage rate increases in the new rate schedule. These result not from shape recognition alone, but from the *combined* effect of shape recognition with greater recognition of presort and destination entry cost differences, as well as increased emphasis on weight rather than piece count as a rate determinant. For flat-shaped mail that is heavier, more thoroughly presorted or entered closer to destination, the increases are smaller. For

---

[3] *See* Library Reference PRC-LR-15, *Standard Regular and Nonprofit Rate Design*, "BD%" worksheet, cells G17 and G29.

[4] *See* Library Reference PRC-LR-15, *Standard Regular and Nonprofit Rate Design*, "BD%NP" worksheet, cells G17 and G31.

[5] *See* Library Reference PRC-LR-15, *Standard Regular and Nonprofit Rate Design*, "Flats" worksheet, columns U through AB.

[6] In section II.B, *infra*, we respond to the claim that the folding/inserting option should be disregarded because catalog mailers obtain a higher response rate from unfolded catalogs.

flat-shaped mail with all of these characteristics, the rate changes are very small or even negative.[7]

These facts have two important implications. First, because "almost all flats volume is heavily presorted,"[8] rate cells with percentage rate increases above 40 percent account for a relatively small share of flats volume—even assuming that the rate changes induce no changes in mailpiece design beyond the folding of piece-rated flats into letter-size envelopes. For pound-rated flats entered at the 3-digit level, the highest percentage rate increase in any rate cell is 39 percent. For pound-rated flats entered at the 5-digit level, the highest percentage increase is 20.5 percent.[9] Second, additional presorting and destination entry offers further opportunities for saving. Hence, even without changing mailpiece design, flats mailers can mitigate the rate impact through presorting and entering their mail deeper into the system, alone or through co-mailing and copalletization.

Another item currently posted on the Postal Service web site also makes this point:

> The new prices [scheduled to take effect on May 14] reflect changes in operations and the marketplace and will offer more choices *and ensure that all types of mail cover their costs*.
>
> The new price structure will create a more efficient mail system so that the overall cost of using the mail is as low as possible. We include incentives to create mailpieces compatible with our processing systems *and to deposit flats and parcels closer to where they are delivered*.

---

[7] *See id*.

[8] USPS Comments at 9; *accord*, Library Reference PRC-LR-15, *Standard Regular and Nonprofit Rate Design*, "TYARVolDisaggregated" worksheet.

[9] Library Reference PRC-LR-15, *Standard Regular and Nonprofit Rate Design*, "Flats" worksheet, columns U through AB.

"New Prices Effective May 14, 2007: Shaping A More Efficient Future," available at www.usps.com/ratecase/ (downloaded May 9, 2007) (emphasis added).

Third, the flats mailers' analysis of maximum rate impact assumes that flats mailers generally mail only in the individual rate cells with the highest increases. In fact, as CCM acknowledges, an individual catalog mailer typically enters catalogs in multiple rate cells. CMM Initial Comments at 11 ("a large number of catalogers send both heavy and light catalogs"). The effect of this is not to "effectively deprive them of any relief at all," *cf*. *id*., but to produce a weighted rate increase that is considerably *lower* than the increases published for light weight cells in isolation.[10]

B. The Record Contains No Evidence That Short Run Constraints Prevent Mailers From Appropriately Mitigating The Rate Increases By Changing Mailpiece Design Or Mailing Practices.

Nothing in the record shows that contractual commitments, planning cycles or other short-term rigidities prevent flats mailers from quickly mitigating as appropriate the May 14 rate increases on flats by reconfiguring their mailpieces as letters or otherwise changing mailpiece design or mailing practices. The claims to the contrary by the catalog mailers and the Postal Service are unsupported by the record.

---

[10] CCM claims that "the final effective overall rate increases" are "42.2 and 19.2 percent, respectively" (CCM Comments at 3 & n. 5). These figures cannot be derived from the library reference worksheet cited by CCM, however. To derive weighted overall values, one would have to know the distribution of volume by ounce increment, information the worksheet does not provide. Lacking this information, CCM appears to have simply assumed that all pieces within each presort and destination entry group are piece-rated. This simplifying assumption grossly overstates the weighted average increase by disregarding the (1) lower percentage increases offered under the new rate schedule for all pound-rated pieces, and (2) the likelihood that a large percentage of piece-rated volume would be folded to qualify as letter-shaped mail.

The proponents of rate rebalancing rely primarily on pages 20-26 of the rebuttal testimony of USPS witness James M. Kiefer (USPS-RT-11). *See* CMM Initial Comments at 9; MOAA Answer to Motion of CCM to Reopen (Apr. 19, 2007) at 3-4. This portion of Mr. Kiefer's testimony, however, is little more than rhetoric.

Mr. Kiefer derides the testimony of Valpak witness Robert Mitchell in support of full pass-through of shape-related costs as "dogmatic," "doctrinaire," "mechanistic," "excessively mechanistic," "radical," "rather extreme," "excessively narrow," lacking in "balance," insufficiently attentive to the "impacts" and "repercussions of his proposals" for mailers, and equivalent to setting rates by "turning the crank on some big rate machine." USPS-RT-11 at 20-26. But this name-calling is unaccompanied by any factual analysis. Nowhere, for example, does Mr. Kiefer explain why mailers cannot fold lightweight flats into letters, reformat flats as letters, engage in deeper presorting and destination entry, substitute less frequent mailings of heavier catalogs for more frequent mailings of lighter catalogs, or take other steps to mitigate rate shock. Indeed, Mr. Kiefer's testimony does not mention these options at all.[11]

Apart from Mr. Kiefer's testimony, the proponents of rate rebalancing offer little more than unsubstantiated assertions and extra-record material. Order No. 8, the Commission's rules, and fundamental notions of fairness and due process preclude the Commission from giving weight to these items. *See* p. 2, *supra* (citing authorities).

[11] Mr. Kiefer's failure to delve into these matters is understandable. His expertise is in public utility economics and general rate case testimony, not direct marketing and catalog publishing. See USPS-T-36 (Kiefer Direct) at iii-iv (biography). This is another reason why the catalog mailer interests, if they wished to preserve their right to challenge full pass-through of shape-related costs, should have sponsored their own rate impact testimony in a timely fashion during the rebuttal phase of the case.

American Business Media asserts that "a good many" of its members mail "fledgling" publications at flat-shaped Standard rates. ABM Comments at 1. ABM, however, cites nothing in the record indicating the extent of this practice, and makes no attempt to weigh the rate increase supposedly facing these publishers against the benefits of shaped-based deaveraging for publishers that rely on *letter-shaped* Standard Mail to solicit new subscriptions. To the contrary, ABM concedes that much of the Periodical Mail volume entered at Standard Mail rates is done so purely for administrative convenience. *Id*. at 2 & n. 1.

PostCom, DMA and MOAA invite the Commission to take "official notice" of the Board of Governors' "assessment—or more aptly, reassessment—of the extent to which mailers and the Postal Service will be harmed if flat-shaped pieces do not convert to letters." PostCom at 3; *accord*, DMA at 5-6 (quoting Governors' decision); MOAA Answer to Motion of CCM to Reopen (April 19, 2007) at 2-3. The Commission cannot lawfully do so.

Rule 31(j), 39 U.S.C. § 3001.31(j), authorizes the Commission to take official notice of "such matters as might be judicially noticed by the courts of the United States or of any matter peculiarly within the general knowledge of the Commission as an expert body: *Provided*, That any participant shall, on timely request, be afforded an opportunity to show the contrary." To satisfy the first prong of this test, the proposition in question must be "capable of accurate and ready determination by resort to sources whose accuracy cannot reasonably be questioned." Fed. R. Evid. 201(b)(2); Presiding Officer's Ruling No. N2006-1/38 at 2. Official notice is inappropriate when the proposition in question is "not accepted fact," but an analysis or judgment that is "open

to interpretation." Order No. 1271, Docket No. C99-4 (Nov. 18, 1999) at 13-14; Presiding Officer's Ruling No. R2006-1/106 (declining to take official notice of "materials requiring interpretation"). The notion that the May 14 rate changes will unduly harm flats mailers is clearly *not* an "accepted fact," but a predictive judgment that is very much in dispute. Indeed, there appears to be a divergence of views even within the Postal Service itself: while the Governors' decision of March 19 and subsequent Postal Service pleadings to the Commission profess a concern with the ability of flats mailers to adapt to the May 14 rate increases, recent statements by the Postal Service to the public indicate a growing confidence that flats mailers will be able to reconfigure their mailings where appropriate. *See* pp. 6-8, *supra*.

Moreover, the second requirement of Rule 31(j)—that any "participant shall, on timely request, be afforded an opportunity to show the contrary"—cannot be satisfied here. The "opportunity to show the contrary" includes the "opportunity to offer rebuttal evidence to the noticed fact." Order No. 1271, *supra*, at 12-13 & n. 12 (citing judicial precedent). The record in this case, however, has closed, and the Commission has declined to reopen it. Order No. 13 at 6-12.

For both of these reasons, no official notice can be taken of the factual inferences that PostCom, DMA and MOAA would draw from the Governors' action. *See also United Parcel Service v. USPS*, 184 F.3d 827, 836 (D.C. Cir. 1999) (declining to give weight to a finding of the Governors regarding the projected earnings of the Postal Service that were "divorced from any specific data in the record to support" the finding").

CCM's explanation of why catalog publishers supposedly cannot mitigate the rate increases recommended by the Commission is a parade of unsupported assertions.

See CCM Comments at 4-8. This portion of CCM's comments is less a guide to the existing record, which CMM has acknowledged as "deficient,"[12] than a wish list of additional points that CCM hoped to establish through its belated and untimely proffer of additional testimony.

The extra-record supporting material that CCM has attached to its pleading (*see* CCM Comments at 3 n.3, 6 n.8, and Appendix A) can be given no evidentiary weight: the material was never offered into evidence, let alone subjected to discovery, cross-examination or rebuttal. *See* Order No. 8 at 6 (admonishing parties not to rely on "[a]necdotal comments unconnected to the record, particularly from persons not parties to the proceeding"); Rule 20b(c), 39 C.F.R. § 3001.20b(c) (comments by nonparties do not constitute evidence unless offered into evidence or found to qualify for official notice); *Mail Order Ass'n of America v. USPS*, 2 F.3d 408, 428-30 (D.C. Cir. 1993);

Further, many of the facts alleged by CCM are self-contradictory or obviously implausible. CCM asserts, for example, that its members have no viable alternatives to flat-shaped mail as a marketing channel. The extra-record comments attached to CCM's pleading assert, however, that the rate increases scheduled to take effect on May 14 will cause catalog mailers to switch irrevocably to "non-postal" marketing "channels,"[13] which are "considerably less costly" and "even cheaper than letters."[14]

---

[12] CCM Motion to Reopen (April 12, 2007) at 4.

[13] *See* Smith & Noble letter at 2; *accord*, Blair Corp. letter at 1 (if the recommended rate increases take effect, "we will reprogram our marketing budgets into other non-postal channels that are considerably less costly and will yield the kind of return necessary to maintain our business"); Cornerstone Brands, Inc. letter (to "combat these rate increases, we will be forced to lower circulation and move more of our efforts to the internet"); The Territory Ahead letter at 2 (asserting that company will respond to rate increase with an "acceleration of investment in our non-catalog channels, specifically

Similarly, CCM, while asserting that catalog mailers failed to receive sufficient advance notice of the Commission's recommended rate changes to test alternative mailpieces and mailing techniques, *id*. at 2, fails to explain why its members did not begin such testing in response to the increases of nearly 19 percent proposed by the Postal Service itself at the outset of this case.

Likewise, CCM asserts that catalog mailers often cannot qualify for presort or destination entry discounts because these mailers "often conduct tests with small sample sizes and many variables." CCM Comments at 5. If the volume of a mailer's test mailings is small, however, by definition they represent only a small portion of the mailer's total volume and postage expense. Moreover, an elementary rule of statistics is that tests with "many variables" require *large* samples: testing many variables with small samples yields estimated values with large standard errors and poor or nonexistent statistical significance. *See*, *e.g*., PRC R2006-1 Op. & Rec. Decis. ¶¶ 3005-3008, 5791, 5794; Daniel L. Rubinfeld, "Reference Guide on Multiple Regression," in Federal Judicial Center, *Reference Manual on Scientific Evidence* 429 (1994).

Perhaps these apparent anomalies have legitimate explanations. Because CCM failed to submit evidence in a timely fashion, however, the record leaves these questions unanswered.

---

retail, Internet, and electronic retailing (HSN)"); Wine Enthusiast letter ("we have no choice but to reduce our volume of mail and to put our money into other methods").

[14] Blair Corp. letter at 1; Smith & Noble letter at 2.

Finally, the catalog mailers have failed to provide any impact analysis for flat-shaped Standard mail *other than* catalogs. This is an enormous and fatal omission: the rate rebalancing proposed by the Postal Service would require users of letter-shaped Standard Mail to fund rate reductions for substantially *all* flat-shaped Standard Mail. Mail order merchandise catalogs are only a subset of this large and diverse mail stream. *See* Household Mail Diary 2005, Table A3-6a. The record is entirely silent about the impact of the May 14 rate changes on all of the other constituents of flat-shaped Standard Mail.

C. The Record Fails To Establish That Any Cost Increases Anticipated By Flats Mailers Result From "Transitional" Supply Rigidities Rather Than The Inherent Cost/Benefit Tradeoffs Of Shape.

The flats mailers' claim of injury suffers from a further major flaw: the record provides no evidence that the added costs allegedly facing the flats mailers result from contractual commitments and other short-run rigidities that prevent efficient adaptation to the rate increases (what CCM calls "transitional" costs)—as opposed to the business tradeoffs dictated by the inherent advantages and costs of larger size mailpieces. This is a critical distinction because, as all the parties appear to recognize, rate relief from rate shock, even when warranted, is at best a temporary measure designed to provide transitional relief from short-term rigidities.[15] By contrast, the greater information-carrying capacity, visual impact, and potentially greater reader impact of flats—all of

[15] *See*, *e.g.*, CCM Motion to Reopen (April 12, 2007) at 1 (characterizing relief sought by CCM as "a reasonable transition period to those rates" recommended by the Commission); *id*. at 2 ("CCM's objective is to permit catalog companies a reasonable transition period to adjust their businesses in the most efficient manner possible."); *id*. at 8 ("the costs of making the transition can be substantially mitigated if large increases in postage rates, to the extent they are deemed necessary, are phased in over a reasonable period").

which tend to increase response rates—are inherent benefits of mailpiece size, and thus must be balanced against the greater costs of flats in the ordinary course of economic decision-making through prices that signal the full extent of the cost differences. R2006-1 PRC Op. & Rec. Decis. ¶¶ 4001-4020 (explaining why postal rate relationships should satisfy the Efficient Component Pricing Rule); *id*. at ¶¶ 4023-4038 (explaining why ECPR requires that rates reflect cost differences caused by shape).

It is entirely appropriate for a mailer to conclude that the superior visual impact and response rate of a flat-shaped mailpiece offer so great an advantage over an otherwise similar letter-shaped mailpiece as to justify the extra cost of the flat. It is equally appropriate, however, for society to require the mailer to pay for the full additional costs in materials, labor and postage imposed on society by that choice. For mailers to make efficient business decisions about whether the benefits of greater mailpiece size justify the extra costs, the prices charged by the Postal Service must reflect the extra costs. The notion that mailers should be entitled to pursue the private economic benefits of using flats rather than letters, but not pay for the additional costs that this choice imposes on the Postal Service and society, offends fundamental principles of both fairness and efficiency.[16]

The comments of the flats mailers repeatedly confuse the cost/benefit tradeoffs arising from the inherent physical attributes of shape with the short-term transitional

[16] The formulation offered 27 years ago by the current Chairman of the Postal Service Board of Governors is as good as any: "none should be favored and none benefited. Each party pays the cost of service it consumes, not less, and does not bear the cost of others' consumption." James C. Miller III and Roger Sherman, "Has the 1970 Act Been Fair to Mailers?" in Roger Sherman, ed., *Perspectives on Postal Service Issues* 63 (1980).

impacts that might, in appropriate circumstances, warrant temporary rate relief. CCM and MOAA quote the testimony of Valpak witness Mitchell for the proposition that "Many flats could not in any reasonable way be converted to a letter. Others are part of a business model that would not be served by a letter instead of a flat." CCM Comments at 8 (quoting 25 Tr. 8836 (Mitchell)); MOAA Answer to CCM Motion to Reopen at 5 (same). These constraints, however, are inherent in shape, not temporary or short-term transitional problems. The cost/benefit tradeoffs they force businesses to make cannot serve as a legitimate justification for temporary or transitional rate relief.

A few of the costs asserted by CCM may be classified as short-term and transitional. These include the added costs allegedly resulting from long "planning cycles" for conceiving and implementing marketing campaigns, "contractual commitments to vendors for extended periods of time," severance pay for laid-off employees, and "liquidated damages" for prematurely terminated vendor contracts. CCM Comments at 6; MOAA Comments at 2 (asserting that catalogs have long production lead times). The extent and significance (if any) of these short run constraints, however, is completely undocumented on the record. Does the gestation period for a catalog marketing campaign, for example, exceed ten weeks, the period since the Commission recommended the rates that are scheduled to take effect on May 14? Does it exceed eight months, the period since Valpak filed Mr. Mitchell's testimony advocating close-to-100 percent pass-through of shape-related costs? Does the period exceed a year, the time since the Commission filed a Federal Register notice of this rate case? Does it exceed eighteen months, the period since the Commission issued its Recommended Decision in Docket No. R2005-1? Does it exceed the 17 years that have elapsed since Docket No. R90-1, when the Commission first announced

its intent to move toward rate recognition of shape-related cost differences? The record does not answer any of these questions.

The flats mailers' claims about contractual rigidities raise similar unanswered questions. Vendor supply contracts may or may not have termination penalties. Employees may or may not be entitled to severance pay. Long-term supply contracts commonly have *force majeure* or gross inequity clauses that allow modification or termination when unforeseen changes in the legal or regulatory landscape substantially alter the economics of an existing contract.[17] Are catalog mailings customarily supplied through long-term requirements contracts? Do they have escape clauses? The existing record also answers none of these questions.

What the record *does* make clear is that mailers have had years of advance warning that flats rates were overdue for large catch-up increases. *See* pp. 3-4*, supra.* Because a reasonable mailer should have anticipated the possibility of a substantial increase in flats rates, the added costs resulting from a mailer's failure to include adequate escape clauses in its supply arrangements cannot be attributed to reasonable reliance on the old rate design, and cannot operate as a justification for delay in implementing the new rates. *See* pp. 4-5, *supra* (citing precedent).

[17] *See, e.g.*, PRC R2006-1 Op. & Rec. Decis. ¶ 5001 n. 83 (*force majeure* clause in Express Mail contract); Robert A. Feldman and Raymond T. Nimmer, *Drafting Effective Contracts: A Practitioner's Guide* §§ 2.02(J)(1), 5.07(B)(2); 30 Williston on Contracts § 77:6 (4th ed. 2004).

III. THE RECORD FAILS TO ESTABLISH THAT THE BENEFITS TO FLATS MAILERS FROM CONTINUED RATE PREFERENCES WOULD OUTWEIGH THE HARMS TO LETTER MAILERS.

The rate shock argument also fails on another independent ground: the record contains no evidence that the benefits to flats mailers from restoring all or part of their rate preference would outweigh the additional harm to letter mailers from the offsetting rate increases on their mail. In part A, we discuss why the Postal Service's position in this case makes rate rebalancing a zero-sum financial exercise. In part B, we discuss the absence of any record evidence that the benefits to flats mailers from this exercise are likely to outweigh the costs to letter mailers.

A. Financing Of Rate Rebalancing Would Be A Zero Sum Exercise.

The parties' May 4 comments confirm that rate relief for Standard Mail flats would be, in the words of the Commission, a "zero sum situation." Order No. 13 at 13. The Postal Service is quite candid about this. It reiterates that rate rebalancing under "under an established revenue requirement" is a "zero sum" exercise that must be undertaken in an "approximately revenue-neutral" manner. USPS Comments at 4 & n. 7; *id*. at 7; *accord*, Initial Statement of the USPS on Reconsideration (Mar. 28, 2007) at 9 (citing Governors' Decision at 10) ("to mitigate rates for flats, it would be necessary to make upward adjustments in other rates, namely, the rates for letters").

To achieve this result, the Postal Service proposes a three cent per piece reduction in the price for minimum-per-piece rated flats, and the piece rate for piece-and-pound rated flats, offset by an *increase* of 0.7 cents per piece for "automation and nonautomation machinable" Standard letters. *Id*. at 7. Multiplied by the 50 billion-plus automation and nonautomation machinable Standard Mail letters carried by the Postal

Service in FY 2005,[18] the annual bill for mailers of commercial Standard letters would be approximately $350 million. A similar arrangement for the nonprofit regular Standard Mail would increase the surcharge on letter mailers by approximately $70 million.[19]

DMA and Postcom, by contrast, stick to their position that flat-shaped mail could obtain reduced rates without any offsetting increases on letters. DMA and Postcom reason that (1) rate reductions for flat-shaped mail would to a significant extent be self-financing because the demand for flat-shaped mail is more price-elastic than the Postal Service has assumed; and (2) any revenue shortfall could be deducted from the $768 million contingency recommended by the Commission and approved by the Governors. DMA Comments at 9-12; PostCom Comments at 3-7.

We wish that these arguments could prevail. Unfortunately, they cannot without further flexibility from the Postal Service. The Postal Service does not believe that the demand for flat-shaped mail service is sufficiently elastic to make rate reductions self-financing. USPS Comments at 4 n. 7. Self-financing rate reductions would require demand elasticities in the range of -1.6 or -1.7.[20] The record provides no evidence that the demand for flat-shaped Standard Mail is so elastic, and DMA and PostCom cite no such evidence.

---

[18] *See* PRC-LR-15, *Standard Regular and Nonprofit Rate Design*.

[19] *See id*.

[20] An elasticity of -1.0 is insufficient, because the additional volume generated by the rate reduction increases the Postal Service's attributable costs as well as its revenue. To make the rate reductions revenue-neutral, the additional volume prompted by the rate reductions must offset not only the reduction in per-unit revenue, but also the increase in total attributable costs.

Likewise, the Postal Service has made clear its unwillingness to divert any of the $768 million contingency to rate relief for flats. The Commission specifically found that a contingency of one percent was warranted, PRC R2006-1 Op. & Rec. Decis. ¶¶ 2039-2042, and the Governors upheld this finding. Decision of the Governors (March 19, 2007) at 2-3. To reduce the Postal Service's revenue requirement by $350 or $450 million on the existing record, absent the Postal Service's consent, would simply invite the Governors to modify the newly recommended rates pursuant to former 39 U.S.C. § 3625(d)—precisely what the Governors did in Docket No. R2000-1.[21] Hence, absent a change of heart by the Postal Service or a showing that the revenue requirement recommended by the Commission on February 26 is clearly understated, the Commission cannot recommend lower rates for flats without ultimately forcing letter mailers to pay higher rates.

Apart from the Postal Service, DMA and PostCom, the remaining parties essentially ignore the Commission's request that they specify, rate cell by rate cell, how they would finance rate reductions for flats. Order No. 13 at 13. CCM "defer[s] at this time to the Postal Service . . ." CCM Comments at 10. MOAA "suggests" that the Commission "explore" the possibility that the demand for flat-shaped mail is sufficiently

[21] *See* R2000-1 PRC Op. & Rec. Decis. (Nov. 13, 2000) (reducing requested After Rates revenue by approximately $1 billion, including a $668 million reduction in the contingency); *id*., Decision of Governors issued Dec. 5, 2000 (implementing rates under protest and requesting reconsideration of revenue requirement); *id*., PRC Op. and Further Rec. Decis. (Feb. 9, 2001) (declining to restore most of disputed amount); *id*., Decision of Governors on Further Recommended Decision (Mar. 5, 2001) (rejecting Further Recommended Decision and requesting further reconsideration); *id*., PRC Op. & Rec. Decis. on Further Reconsideration (Apr. 10, 2001) (reaffirming previous decision); *id*., Decision of the Governors on the Recommended Decision on Further Reconsideration (issued May 7, 2001) (modifying Recommended Decision by restoring disputed contingency amounts and an additional $200 million "to ensure the financial integrity of the Postal Service and the postal system").

elastic to make rate reductions self-financing. MOAA Answer to CCM Motion to Reopen (April 19, 2007) at 5-6. ABM ignores the issue entirely.

B. The Record Provides No Evidence That The Benefits To Flats Mailers From Another Year Of Rate Preference Would Outweigh The Costs To Letter Mailers From An Additional Rate Increase Of $350 Million.

If rate reductions for flat-shaped mail must be offset by rate increases for letter-shaped mail, proponents of the former necessarily must show that its benefits outweigh the harms of the latter. These harms include the economic injury to letter mailers and their customers from higher rates, plus the deadweight loss to society as a whole from a rate structure that violates the Efficient Component Pricing Rule ("ECPR"), plus the transaction costs to mailers and their vendors from back-to-back changes in Standard Mail rate schedules within a very short interval. The initial comments of the flats mailer interests do not begin to make such a showing. Indeed, none of the parties advocating rate reductions for flats (other than DMA and PostCom, which oppose any offsetting rate increases for letters) discuss this issue at all.

The issue, however, cannot be evaded by being ignored. Even a cursory review of the allegations of self-injury offered by the flats mailers suggests that letter mailers share many of the same structural characteristics. To paraphrase CCM's comments:

- Many users of letter-shaped solicitation mail are "small entrepreneurs offering niche products and services." *Cf*. CCM Comments at 4.
- Whether a business that uses letter-shaped solicitation mail is "large or small, extensive planning and sample testing drives its [mailpiece] design decisions." *Id*. at 4.
- Direct mail campaigns by letter mailers, e.g., credit card issuers, often have long "planning cycles." *Id*. at 4-5.

- Businesses that rely on letter-shaped Standard Mail for marketing "use extensive sample testing to drive mailing decisions." *Id*. at 4-5.

- Many users of letter-shaped Standard Mail—ranging from large national credit-card issuers to large and small charities and other nonprofit organizations--depend "on a continuous stream of mailings to generate future sales volume" and to offset the inevitable decay of existing account portfolios and donor bases over time. *Id*. at 5.

- Mail "is a key component of" the "business plans . . . and drives revenue" for letter mailers. *Id*. at 5.

- Postage "constitutes a substantial portion of" expenses for mailers of letter-shaped Standard Mail. *Id*. at 5-6.

- Letter mailers "typically have contractual commitments to vendors for extended periods of time, and may need to lay off employees (with severance pay)" if letter mail solicitation campaigns are "hastily curtailed." *Id*. at 6.

- While flats mailers can respond to rate increases by converting mailpieces to letter shape, letter mailers have no comparable downsizing option.

- Most users of letter-shaped solicitation mail operate in vigorously competitive downstream markets, and thus face "limitations on passing through an increase in costs to customers." *Id*. at 6.

Whether flats mailers or letter mailers are more or less constrained by each of these factors is a question of fact. Because the flats mailers failed to raise the issue of rate shock in a timely fashion, however, the record provides no answer to these questions. Given this gap in the record, it is impossible for the Commission to conclude that shifting $350 million annually of flats-related costs to letter mailers would reduce the net amount of rate shock within Standard Mail as a whole.

Moreover, the vehement opposition provoked by the Commission's query about the alternative of minimizing rate shock by rebalancing rates within flat-shaped mail itself (Order No. 13 at 13, question 2) is eloquent testimony to what the flats mailers really think about the merits of what PostCom calls "robbing Peter to pay Paul." *See*

USPS Comments at 9-10; CCM Comments at 11; MOAA Comments (proposing *further* reduction in pound rates); PostCom Comments at 3 (second full paragraph). "Rebalancing within flats," CCM states, "may distort the incentives created by the existing rate relationships to encourage economically efficient choices." CCM Comments at 11. Presort discount relationships and drop-ship discounts should be retained, adds the Postal Service; doing otherwise "could potentially lead to disruptive rate relationships and sending confusing and/or anomalous signals to mailers." USPS Comments at 5. The unwillingness of the proponents of rate rebalancing to accept the same costs and burdens that they seek to impose on letter mailers speaks volumes about the fairness and equity of shifting $350 million or more of flats-related costs to letter mailers.

IV. RATE REBALANCING WOULD HARM THE PUBLIC INTEREST BY RESTORING A *STATUS QUO ANTE* THAT WAS UNFAIR, INEFFICIENT, AND LONG OVERDUE FOR REFORM.

Except for the Postal Service, none of the other parties dispute in their initial comments that rate preferences for flat-shaped Standard Mail are unfair and inefficient; that flat-shaped mail costs more to process than letters; that shape-related rate differentials which fail to cover 100 percent of shape-related cost differences violate the Efficient Component Pricing Rule, and are therefore inefficient; and that the longstanding rate preference for flat-shaped mail at the expense of letter-shaped mail has, in many rate cells, has forced the latter to subsidize a portion of the costs of the former. *See* FSR-MMA-NAPM-NPPC Comments at 4-6; R2006-1 PRC Op. & Rec. Decis. ¶ 4032 ("it seems to be fundamentally fair that mailers pay the costs they impose upon the Postal Service plus the same contribution per piece that all the mailers make

within the same subclass."); *id*. at ¶¶ 4001-4020 (explaining why postal rate relationships should satisfy the Efficient Component Pricing Rule); *id*. at ¶¶ 4023-4038 (explaining why ECPR requires that rates reflect cost differences caused by shape).

The Postal Service suggests that compliance with the Efficient Component Pricing Rule (and efficient pricing generally) is less important for shape-related cost differences because "ECP does not apply to these relationships, either as a matter of theory or for practical reasons." USPS Comments at 6. The Commission considered and rejected this position, however, in its Recommended Decision. PRC R2006-1 Op. & Rec. Decis. ¶¶ 4021-4038. Moreover, whether or not the Postal Service agrees that the Efficient Component Pricing Rule should apply to letter/flat rate differentials, the Postal Service clearly agrees with the general proposition that economic efficiency warrants recognition of shape-based cost differences in rates:

> The Postal Service seeks a rate and classification schedule that reflects greater recognition of mailpiece shape. The objective of this policy is to encourage more efficient preparation of mail and to help assure that distinct categories make a contribution to the institutional cost burden borne by their respective subclasses.
>
> To the extent that it is possible to choose among shape formats for sending letters, merchandise or other items, the pricing proposals submitted here for review encourage efficient choices. For example . . . an unfolded document currently mailed in a flat-shaped envelope could possibly be folded and sent in a letter-shaped envelope. It is this latter example that shows how a price difference could lead to production of mail that can be handled at a lower cost. To the extent any net additional cost of producing a letter instead of a flat (e.g., the additional cost of folding and inserting) is lower than the price difference, the mailer may consider choosing the letter format. Ultimately, that decision will also incorporate any value gained by having the recipient receive an unfolded document, and in a larger mailpiece that might garner more attention. In any event, by having a price difference, there is heightened consideration to the selection of the shape format.

Docket No. R2006-1, Initial Brief of the USPS (Dec. 21, 2006) at 166-67.

The Postal Service has gone even further in its public pronouncements about the R2006-1 rate changes during the past few days. Referring to the very letter/flat rate differentials that the Postal Service is asking the Commission to compress on reconsideration, the Postal Service's website advises the public that those rates are "more efficient" because "shape matters" and "the new price structure will create a more efficient mail system so that the overall cost of using the mail is as low as possible":

New Prices Effective May 14, 2007

Shaping a More Efficient Future

> . . . The new prices reflect changes in operations and the marketplace and will offer more choices and ensure that all types of mail cover their costs.
>
> *The new price structure will create a more efficient mail system so that the overall cost of using the mail is as low as possible.* We include incentives to create mailpieces compatible with our processing systems and to deposit flats and parcels closer to where they are delivered. . . .
>
> *And shape matters. It's important to us because the cost of handling each mail shape – letters, large envelopes ("flats"), and packages ("parcels") – varies widely.* Shape is also important to you because it affects how you position your message or your product.

"New Prices Effective May 14, 2007: Shaping a More Efficient Future," available at www.usps.com/ratecase/ (downloaded May 11, 2007) (emphasis added).

"More efficient mail system." Incentives for minimizing the "overall cost of using the mail." "Shape matters." This sounds very much like an endorsement of ECPR in plain English.

"Postal Service Says Shape Matters," the news release quoted at p. 6-7, *supra*, is in the same vein:

> Shape-based pricing, in effect, creates a more flexible rate system by giving mailers the opportunity to obtain lower rates if they find ways to

> configure their mail into shapes that reduce handling costs for the Postal Service and that helps to keep rates affordable for everyone.

USPS News Release No. 07-41, "Postal Service Says Shape Matters" (May 7, 2007), available at http://www.usps.com/communications/ newsroom/welcome.htm (down-loaded May 9, 2007).

We could not agree more.

CONCLUSION

For the foregoing reasons, the Commission should adhere to the rates it recommended for letter-shaped and flat-shaped mail on February 26, 2007.

Respectfully submitted,

Richard M. Whiting
Executive Director and General Counsel
THE FINANCIAL SERVICES ROUNDTABLE
1001 Pennsylvania Ave., N.W.
Suite 500 South
Washington DC 20004
(202) 289-4322

Irving E. Daniels, Jr.
Vice President for Banking and Securities
THE FINANCIAL SERVICES ROUNDTABLE
1001 Pennsylvania Ave., N.W.
Suite 500 South
Washington DC 20004
(202) 289-4322

For the Financial Services Roundtable

Joel T. Thomas
Executive Director
NATIONAL ASSOCIATION OF PRESORT MAILERS
P.O. Box 3295
Annapolis MD 21403-0295
(877) 620-6276

Counsel for National Association of Presort Mailers

Arthur B. Sackler
Executive Director
NATIONAL POSTAL POLICY COUNCIL
1156 15th St., NW, Suite 900
Washington DC 20005
(202) 955-0097

Counsel for National Postal Policy Council

Michael W. Hall
35396 Millville Road
Middleburg VA 20117
(540) 687-3151

Counsel for Major Mailers Association

David M. Levy
Richard E. Young
SIDLEY AUSTIN LLP
1501 K Street, N.W.
Washington DC 20005-1401
(202) 736-8000

Counsel for National Association of Presort Mailers and National Postal Policy Council

May 11, 2007

Appendix A

Pitney Bowes advertisement, *Flats to Folded*, downloaded May 10, 2007, from

http://www.pb.com/bv70/en_us/extranet/contentfiles/editorials/downloads/ed_ECEd_Shape_Based_Price_Flat_To_Folded.pdf

FLATS TO FOLDED

FIRST-CLASS STRATEGIES

A Practical Guide

By converting flats into letter-size mail, you can take advantage of lower postal rates.

The Changes

With the emphasis on shape-based pricing, the cost for flats will increase much more than the cost for letter-size mail – with some weights increasing by more than 50%.

Previously the cost for flats and letter-size mail over 1 ounce was the same. Under the new plan, flats would cost $0.39 more per piece, regardless of weight.

First-Class Flats – Single Piece Rates

	Current	New
1 ounce Flat	$0.52	$0.80
2 ounce Flat	$0.63	$0.97
3 ounce Flat	$0.87	$1.14
Additional Ounce	$0.24	$0.17

Letter Dimensions

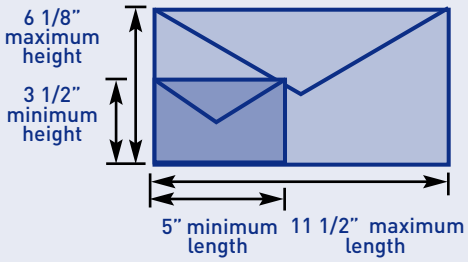

thickness: 0.007" minimum, 1/4" maximum
maximum weight = 3.5 oz.

Smart Mailstream Practices

By having a good understanding of what constitutes a letter vs. a flat, you can take steps to create mail pieces that are easier for the post office to process.

- **Design mailpieces to meet letter-size dimensional requirements.** While many letters are already created to fit inside a standard #10 envelope, you actually have a lot of flexibility to create mailings of different sizes – and still qualify for the lower letter-size rates.
- **Convert flat mail to letter-size mail (up to and including 3.5 ounces) with a single fold.** The concept of "flats to folded" is important if your current mailings are between one and 22 pages. (Higher page counts are unlikely to qualify for letter-mail rates as the weight will likely exceed the 3.5 ounce limit.) In simplest terms, converting flat mail to letter-size mail would be one of the easiest ways to cut costs and mitigate the rate increase.
- **Repackage parcels as flats.** Under the new rates, the cost for a 1-ounce parcel would more than double. However, a flat-size mailpiece could be up to 3/4 inches thick – which may make it possible for you to repackage mailings that you currently send as parcels to meet the flat-rate requirements.

Flat Dimensions

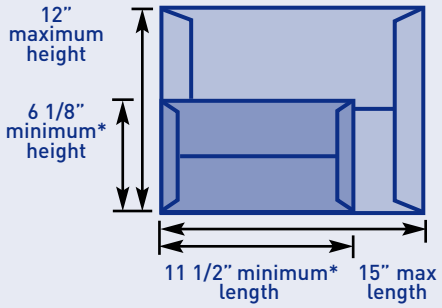

thickness: 3/4" maximum

*Flats exceed at least one minimum dimension

Making it Happen

The rate change creates many opportunities for savings through proper mailpiece planning.

Precision Folding. If you're looking for a quick ROI fix, a heavy-duty folder combined with an intelligent inserting system can provide you with the high-speed, automatic feeding and folding required to transform documents into a size appropriate for a 6" x 9" letter – all with a single fold. Not only will you save on postage, you'll increase speed and productivity across your entire operation.

Automatic Rating. Mailing systems with dynamic weighing and postage rating by shape technology maximize efficiency by processing mixed weight material up to 16 oz. in a single operation. Each piece is automatically weighed and measured, ensuring an accurate postage calculation.

Pitney Bowes makes it easier for companies to optimize their mailstream, with solutions including:

- Automatic Inserting Solutions
- Mail Folding Systems
- Digital Mailing Systems

For more information, please contact us.